PRODUCED BY AN AUTODESK STUDENT VERSION

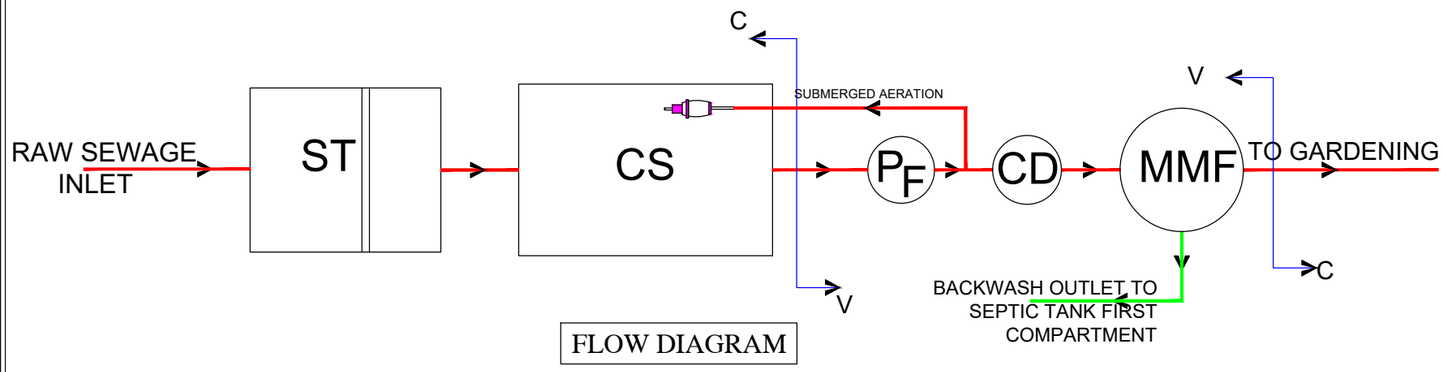

FLOW DIAGRAM

NOTE :-

1. ALL DIMENSIONS ARE IN METER
2. INTERNAL PIPING LAYOUT MAY CHANGE AS PER SITE.
3. MAKE PROVISION FOR VENTILATION & ELECTRICITY IN EQUIPMENT ROOM.
4. WE HAVE ASSUMED 300MM WALL THICKNESS. IT MAY CHANGE AS PER R.C.C. DESIGN.KINDLY ENSURE INTERNAL DIMENSION FOR STP UNIT REMAIN INTACT, ACCORDINGLY OVER ALL DIMENSIONS WILL CHANGE , HOWEVER INTERNAL DIMENSIONS AS SPECIFIED.
5. TYPE AND NUMBER OF WINDOWS TO BE DECIDED BY ARCHITECT.
6. A CLEAR HEIGHT OF EQUIPMENT ROOM 2.5 MET.SHALL BE ENSURED TO ALL UNOBSTRUCTED MOVEMENT OF LARGE EQUIPMENTS.
7. FREE BOARD AT ACTUAL.

ST	SEPTIC TANK
CS	COLLECTION SUMP
P_F	FILTER PUMP
MMF	MULTI MEDIA FILTER
CD	CHLORINE DOSING
	EFFLUENT LINE
	BACKWASH LINE
V	VENDOR
C	CLIENT

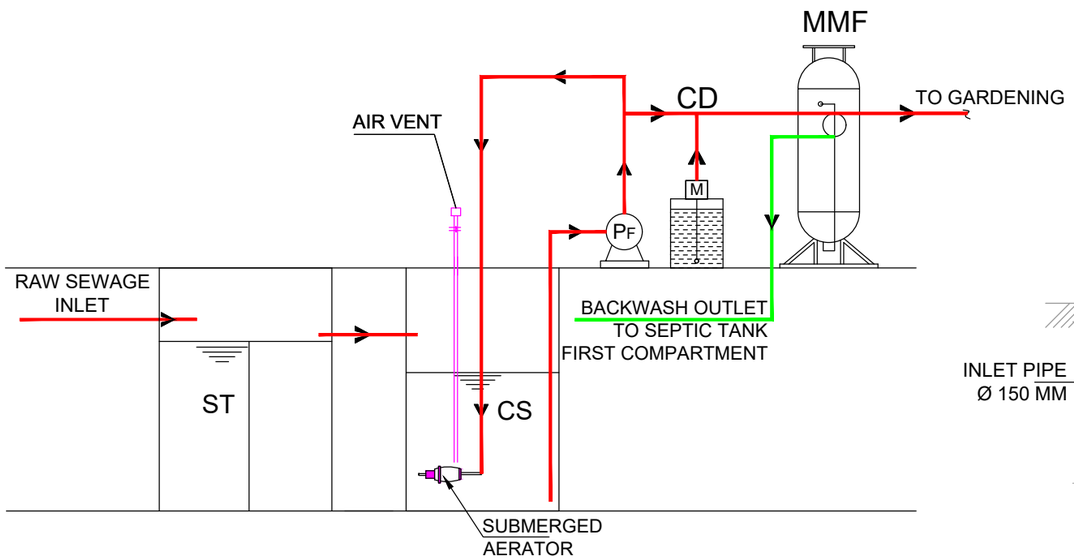

HYDRAULIC DIAGRAM

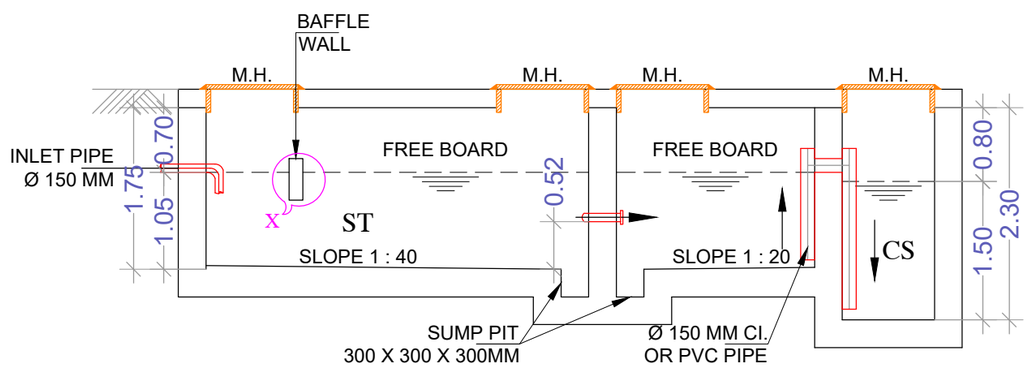

SECTION A-A

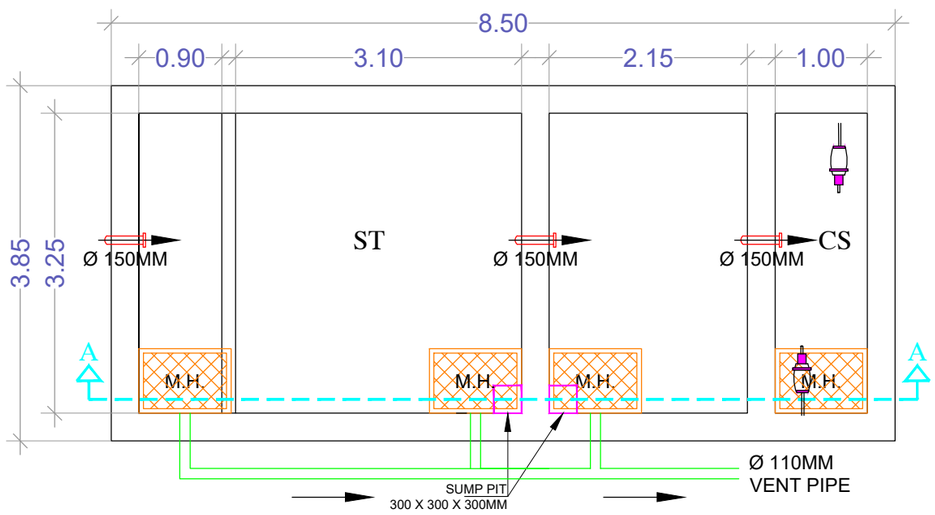

BOTTOM PLAN

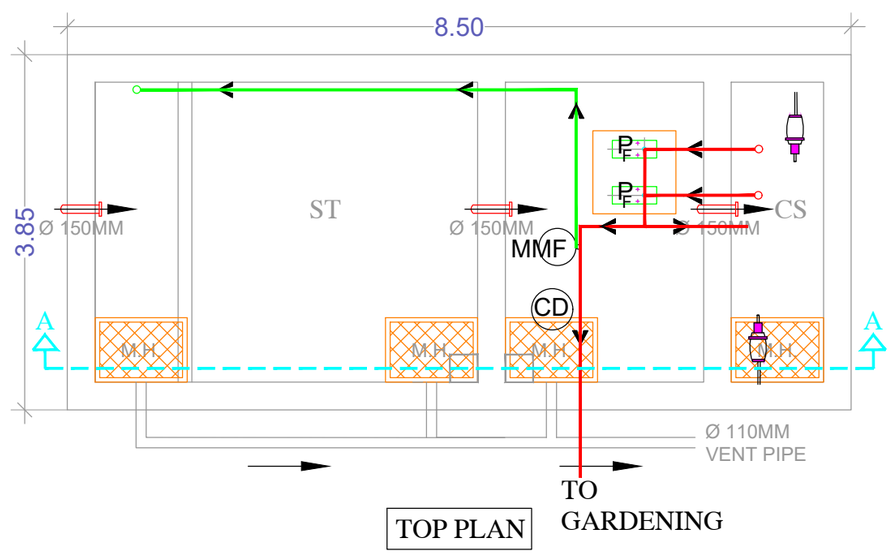

TOP PLAN

DRG NO.	M/167/GEN/07	01/01
	R2	

STAMP & SIGNATURE

McLIN Consultants Pvt. Ltd. FOR APPROVAL Pune-30

KEY PLAN

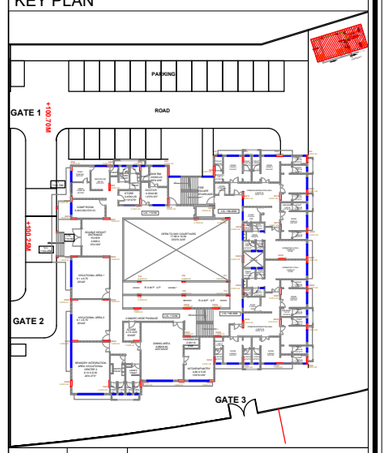

REV NOS	DATE	REMARK / SUBJECT
R5		
R4		
R3		
R2	12.02.21	REVISED AS PER ARCH. LAYOUT
R1	07.12.19	SIMPLIFIED STP LOCATION CHANGE

REVISIONS

DRAWING TITLE	FLOW, HYDRAULIC DIAGRAM & LAYOUT PLAN FOR WWTP DRAWING CAPACITY - 17KLD
PROJECT	ARC AUTISM RESEARCH & TRAINING CENTRE

McLIN CONSULTANTS PVT.LTD.
CONSULTANCY IN PLUMBING AND ENVIRONMENTAL ENGINEERING
'GIRIJA' 5, Sitabaug Colony, Vithalwadi Road, Pune - 411 030 Tel - 2432 0010
e-mail - mclincpl@gmail.com

CLIENT	MR. SUBHASH LELE	
ARCHITECT	INDESIGN ARCHITECTS	
NORTH	DATE:-	27.11.2019
	DRAWN BY	PANKAJ G.
	CHECKED BY	MOHANISH P.
	APPROVED BY	MOHANISH P.
SCALE:-NTS		

C:\Users\Dell\Downloads\ARC Plumbing Drawings (1)\ARC Plumbing Drawings\R2 Simplified STP 12.02.21.dwg

PRODUCED BY AN AUTODESK STUDENT VERSION
PRODUCED BY AN AUTODESK STUDENT VERSION
PRODUCED BY AN AUTODESK STUDENT VERSION